UNLV
UNIVERSITY OF NEVADA LAS VEGAS

CER
Center for
Energy Research

SOLAR CELL DESIGN USING METAMATERIALS

YANG LIU, YITUNG CHEN, JICHUN LI
UNLV Center for Energy Research

Background

Natural structure with simultaneous negative permittivity and permeability has not been discovered yet. However, using specially-designed metal embedded in dielectric bodies can achieve a kind of artificial negative index. This periodic structure which is smaller than the guided wavelength is known as a metamaterial.

However, recent designs of metamaterials have some disadvantages when they are used in the application of solar cell. The perfect absorption is only within a narrow band, and for most of the solar spectrum, the absorption is no more than 10%. Here, a new kind of absorber for the solar spectrum has been designed and analyzed, in order to utilize the solar energy effectively.

Model

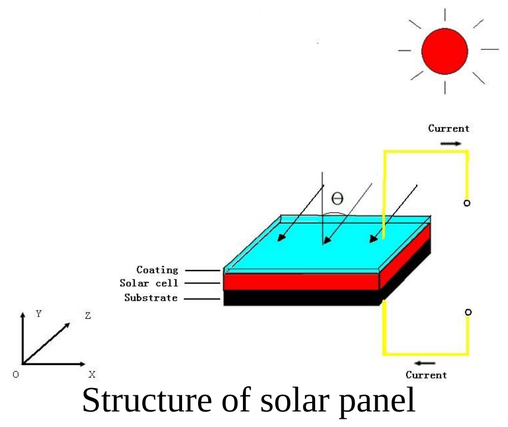

Structure of solar panel

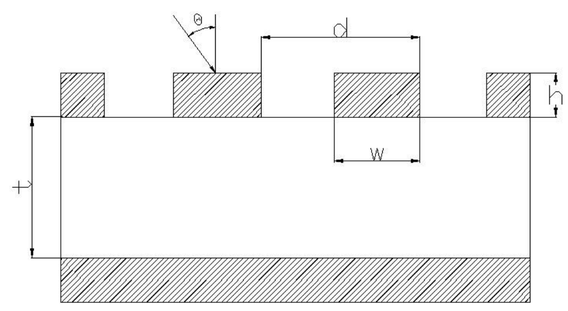

Benchmark with Diem et al. (2009)

It consists of a W plate (shadowed) with a thickness 200 nm. On top of the W plate a spacer layer of silicon nitride (SiN) is deposited with a thickness *t*. An array of metallic stripes arranged by a lattice constant *d* is located above the SiN layer with a rectangular cross section *w*(width)∗*h*(height). The geometric parameters (*d*, *w*, *h* and *t*) of the structure are adjusted to achieve perfect absorption at different frequencies. For example, for the specific geometry (*d* =2 μm, *w*=0.4 μm, *h* =0.2 μm and *t* =0.65 μm), the absorption coefficient can reach 99% at 69.24 THz.

Theory

The dielectric permittivity of the W here is given by Drude model:

$$\varepsilon = 1 - \frac{\omega_p^2}{\omega(\omega + i\gamma)}$$

The absorption is calculated through S-parameter since we consider no loss from the W substrate

$$\text{Absorption} = 1 - |S_{11}|^2$$

where the S-parameter

$$S_{11} = \frac{\sqrt{\text{Power reflected from port 1}}}{\sqrt{\text{power incident on port 1}}}$$

Benchmarked Result

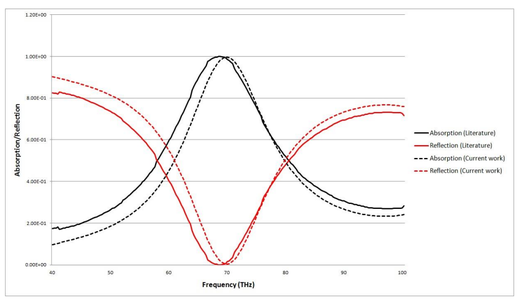

Absorption and reflection for perpendicular incidence TE wave

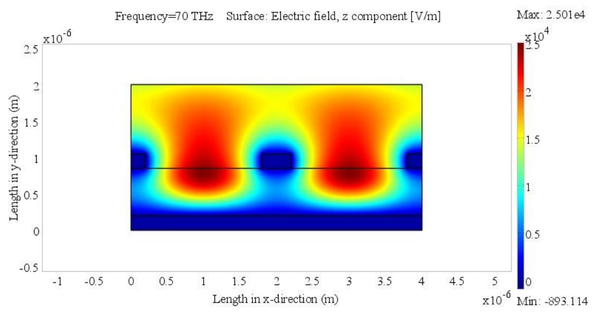

Magnitude of the z component of the electric field at the resonance

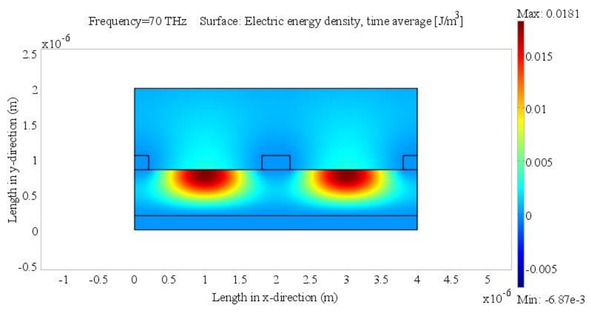

Electric energy density

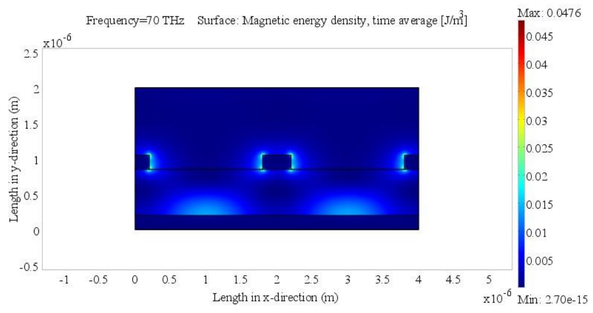

Magnetic energy density

New Design

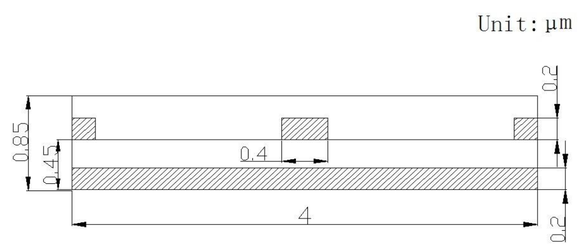

New design R-SC

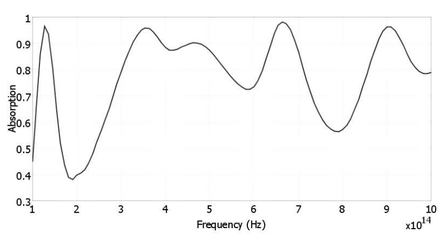

Absorption of R-SC

Other New Designs

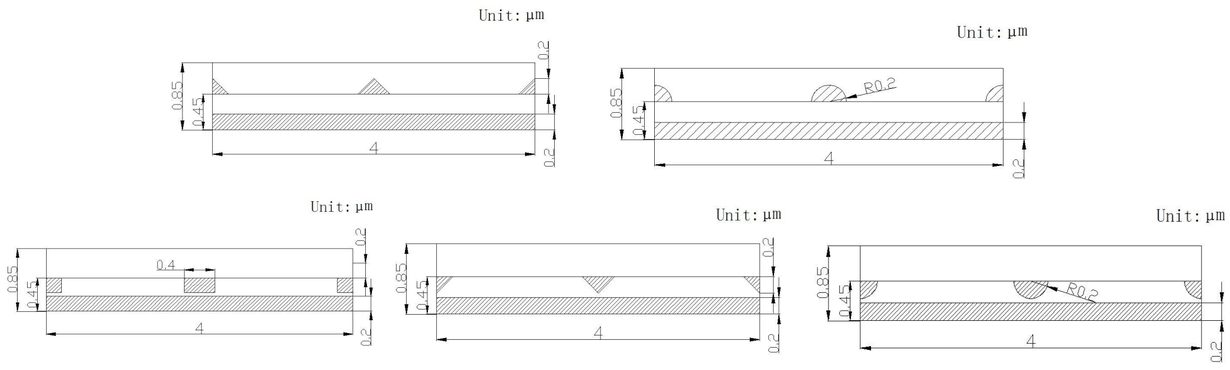

Average Absorption %	R-SC	T-SC	S-SC	ER-SC	ET-SC	ES-SC
Total frequency domain	76.97	75.50	**76.85**	64.93	63.90	64.42
Visible Region	83.58	80.73	**84.28**	67.77	66.78	67.29

Parametric Study

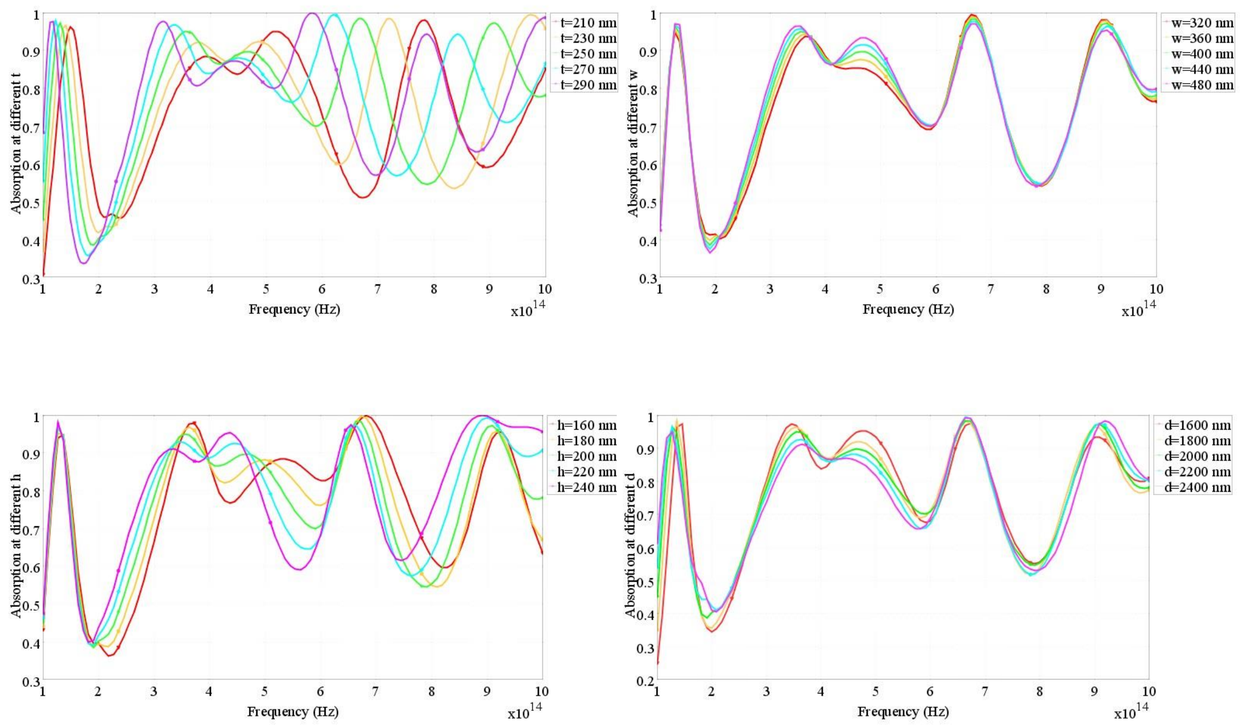

Material Design

For the metal stripe, those with high melting temperature and high conductive coefficient are considered to replace W. Also, different materials related to solar cell design are used to replace the SiN.

Absorption in Visible Region%	SiN	Si	a-Si	Poly-Si
Au	82.35	58.03	58.53	58.64
Cu	81.97	54.78	56.07	56.33
Ni	**84.29**	65.52	67.90	68.22
W	84.28	62.51	64.92	65.01

Absorption over Solar Spectrum%	**SiN**	**Si**	**a-Si**	**Poly-Si**
Au	74.92	53.76	48.37	47.05
Cu	74.47	45.35	46.09	44.82
Ni	**77.18**	56.51	56.70	56.01
W	76.85	53.53	54.08	53.02

Conclusion

Best solar absorption is obtained using the new design S-SC, which is 84.28% in the visible region and around 76.85% in the total solar spectrum.

Parametric studies on different geometries optimized the best absorption.

From the several materials considered, it is found that SiN utilized together with Ni can give the best absorption in not only visible region but also solar spectrum.